METRIC 420–9225

QTY	CONNECTION	SIZE	SHEETS
1	FUEL INLET	DETAIL	3,4,7
1	EXHAUST	DETAIL	2,6,7
1	JACKET WATER OUTLET	DETAIL	2,6,7
1	JACKET WATER INLET	DETAIL	2,3,7
1	JACKET WATER VENT	11/16–16 THD	3,6
1	SCAC WATER VENT	11/16–16 THD	3,6
4	FUMES DISPOSAL OUTLET	ø60.3 [ø2.37] ID	2,4,5
1	SEPARATE WATER INLET/OUTLET	DETAIL	4,6,7
1	OIL DRAIN	11–1/2 NPTF	3,4

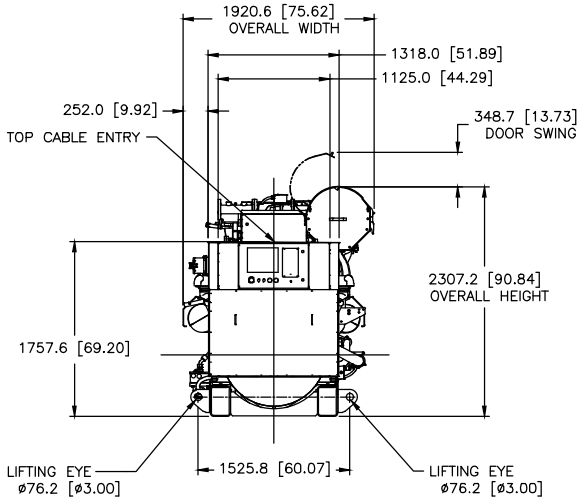

REAR VIEW

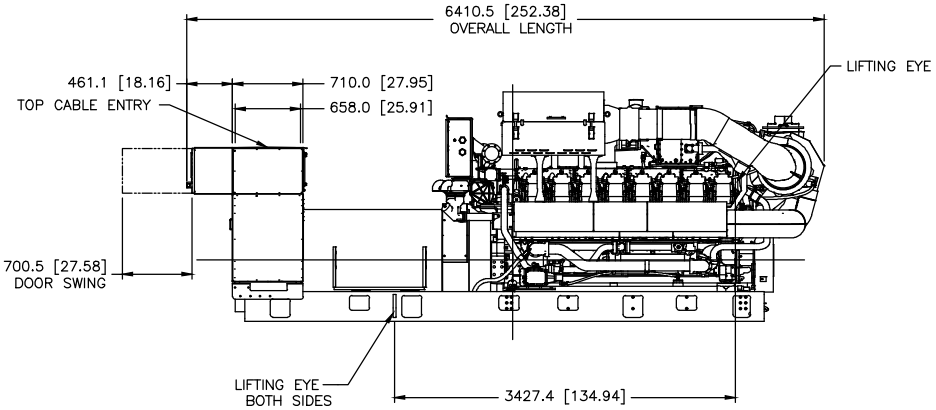

RIGHT SIDE VIEW

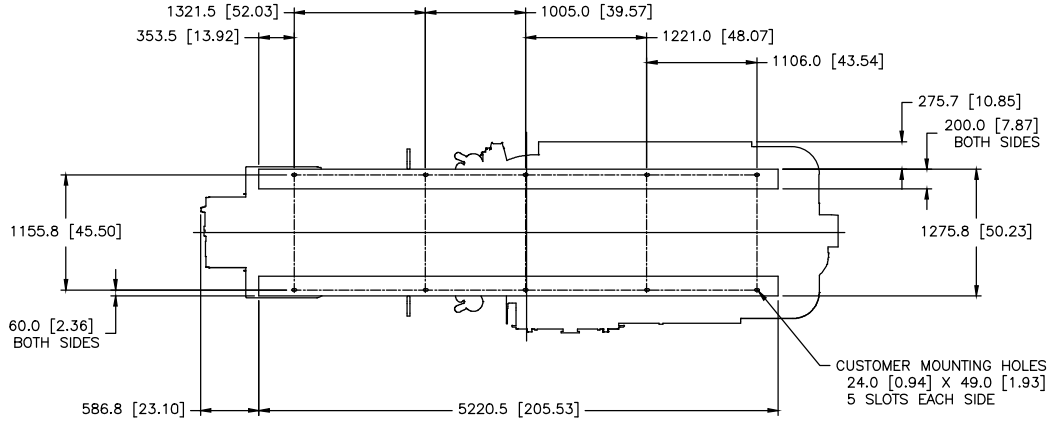

FOOTPRINT
(DIMENSIONED OUTLINE VIEW FROM ABOVE)
(RIGHT SIDE ORIENTATION)

MODEL	TYPE	PRICING AR	GENERATOR	MANDATORY ATT.	
G3516	I	LF–4582 CHG 03	LF–4579 CHG 00	LA–5767 CHG 07	532–8800 CHG 01
				LF–4413 CHG 00	521–5690 CHG 03
				LF–4102 CHG 00	389–9891 CHG 00
		LF–4584 CHG 03	LF–4220 CHG 00	LA–6051 CHG 01	390–0278 CHG 03
				LF–2844 CHG 02	381–0757 CHG 00
		LF–4586 CHG 03		LF–2850 CHG 02	311–7117 CHG 01

REV		
7		
6		
5		
4		
3		
2		
1	1E2966B IDENT	
	1E2733 DRAWING–AUTOCAD	
	1E0198W BRAND MARKINGS	
	1E0013G CONFIDENTIALITY	
	1E0012A INTERPRETATION	
	1E0011 INTPR & TOL	

	SYD NO.	NAME
DRN	M. J. SWIFT	
CHK	M. J. SWIFT	
APPD	N.P. MOUNTJOY	
CDF	CDF	PROD
STAGE	RECORDS	X

UNLESS OTHERWISE SPECIFIED
DIMENSIONS ARE IN MM INCHES
DIMENSIONS N/S TOL APE BEND
SCALE1 = 16
SHEET1 OF 15 | 04 12FEB20

CATERPILLAR INC.

THE INFORMATION HEREIN IS THE PROPERTY OF CATERPILLAR INC. UNLESS ITS RECEIPT HAS BEEN ACKNOWLEDGED OR THE PARTIES HAVE ENTERED INTO A WRITTEN AGREEMENT, THIS DOCUMENT MUST BE RETURNED UPON REQUEST.

INSTALLATION–ENGINE
G3516H 50HZ W/OP LV/MV

420–9225 - | SIZE E | WD75